Chapter 3

GEOMETRICALLY COMPLETE MODELS

Graphical models do not satisfy our requirements for completeness and general applicability. We now start the search for other solutions by characterizing more closely the desired properties of solid models.

3.1 PROBLEMS OF GRAPHICAL MODELS

Chapter 2 gave us an intuitive understanding on how to construct graphical models from lines and points. While there are many practically important aspects that we have not touched at all (for instance the representation of graphical models in secondary storage, or their generalization to represent and process curves), we can now assess the representational issues of graphical models.

So, which of the questions of Table 1.1 on page 9 can be answered based on the information available in graphical models?

It is easy to generate simple graphical output based on the information in a graphical model (as the term implies). Unfortunately, points and lines alone do not, in general, convey sufficient information to create more sophisticated output involving removal of hidden lines or shaded surfaces. The least that is needed is a polyhedral model. (Of course, for a mere wire frame consisting of just points and lines, surface properties such as visibility and shading are not even defined.)

No fully automatic conversion from a graphical model to a polyhedral model can exist, as the ambiguous object of Figure 1.2 on page 7 shows. Remarkably, an algorithm capable of enumerating *all* polyhedral models

corresponding to a given graphical model has been reported by Markowsky and Wesley [80]. But human guidance is still needed to select the correct one.

For restricted classes of objects, even an automatic conversion is possible. For instance, Hanrahan [50] reports an algorithm that can construct a polyhedral model from a wire frame whose points and lines form a planar graph, i.e., a wire frame which is known to correspond with a polyhedron with no "holes."

For some problems graphical models are adequate. If we need a collision testing algorithm for finding free paths for a moving object in a scene of static objects with lots of free space around them, we may find that collision testing between the convex hulls of the objects is adequate. Then graphical models are perfectly all right, because their information is sufficient for convex hull calculation. However, if the collision testing problem involves the search of narrow free paths inside a partially finished assembly, convex hulls will always intersect and provide little help.

With graphical models, we face thus the problems of incompleteness and potential ambiguity. If we are willing to seriously limit the scope of problems we want to deal with automatically, or if we are willing to limit the class of objects to be modeled, these problems can be avoided. But such limitations are in contradiction with the aim for general-purpose models set forth in Chapter 1, and motivate our search for other, geometrically more rigorous models.

3.2 A THREE-LEVEL VIEW OF MODELING

In the preceeding, we used terms such as "completeness" and "ambiguity" to speak of the merits and the problems of graphical models without bothering too much about their meaning. Some examples of the previous section seem to blur the intuitive image we have of these terms, however. Are graphical models "complete" as far as convex hulls are concerned? Are "ambiguities" resolved if we wisely stick to sufficiently simple objects?

This confusion can be avoided if we adopt a more rigorous view of modeling [95]. This view is based on distuingishing between three separate levels of modeling (see Figure 3.1):

1. *Physical objects:* By means of models, our aim is to speak and argue about some real things of our three-dimensional real world. Unfortunately, assuming a Platonician view, we cannot even perceive a real-world object in its full complexity and sub-microscopic detail, much less represent all aspects of it in a computer.

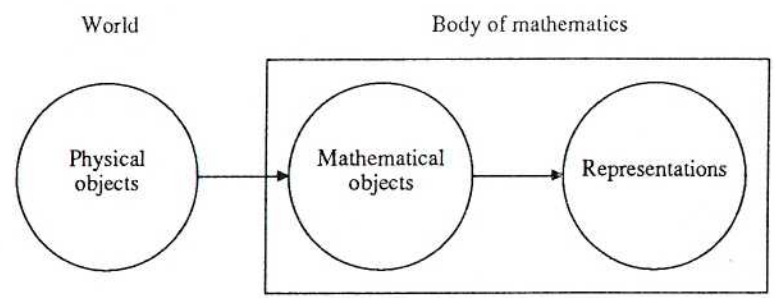

Figure 3.1 A three-level view of modeling.

2. *Mathematical objects:* In order to have any hope of modeling objects in a computer, we must therefore adopt a suitable idealization of the real three-dimensional physical objects we are ultimately interested in. These idealized objects should have an intuitively clear connection with the real world, while being so simple that we can assign computerized representations to them.

   To achieve this, we shall characterize rigorously a class of mathematical objects (the *modeling space*) we would like to speak about. As we shall see later, such a characterization can be achieved by using basic concepts from the mathematical theories of point-set and algebraic topology.

3. *Representations:* After establishing rigorously the class of mathematical objects we are interested in, the final step of the modeling activity is to assign to the mathematical object a representation which is suitable for computer manipulation. As we shall see later, the three-level view of modeling allows us to characterize the desirable properties of solid modeling methods rigorously by analyzing the relationships of mathematical objects and their computer representations.

According to the three-level view, we shall not attempt to model actual physical properties of things. Instead, we shall try to represent some idealized objects in a manner that allows us to analyze their idealized properties, and hope that the results gained in this fashion permit us to gain information on the actual real objects hiding in the background.[1]

[1] Of course, sometimes the aim of our modeling is *not* related to physical things, but precisely to idealized things. For instance, the specification of a mechanical part defines an idealized nominal object (or a class of mechanically equivalent objects). In this case,

3.3 MATHEMATICAL MODELS OF SOLIDS

Let us now concentrate on sharpening our intuitive view of "solidity," i.e., on the proper definition of a class of mathematical objects that forms the subject matter of solid modeling, while leaving the exact nature of the particular geometric problems we want to solve with models aside (as for now).

It turns out that we can arrive at a characterization based on two approaches, one stressing the "three-dimensional solidity" of things, and the other concentrating on the fact that we are primarily interested on the bounding surfaces of things. These points of view lead us to using the languages of point-set topology and algebraic topology, respectively.

The next sections are aimed at introducing a rigorous characterization of the objects we shall be interested in. By necessity, they are somewhat technical; some of the required terminology is introduced in Appendix B.

3.4 POINT-SET MODELS

Starting from the very basics, we shall consider the three-dimensional Euclidean space E^3 a suitable idealization of the real space our real objects lie in. Consequently, the most general mathematical abstraction of a real solid object is a subset of E^3, i.e., a set of points of E^3.

The advantage of the point-set idealization of real objects is that we can use concepts of *point-set topology* to characterize rigorously the desired properties of three-dimensional objects. Because we shall be interested usually only in finite objects, we can start from the following working definition:

Definition 3.1 *A* solid *is a bounded, closed subset of* E^3.

The restriction to closed sets (as an alternative of open sets) is a matter of convention only.

While Definition 3.1 certainly captures certain aspects of our notion of a solid, the class of objects permitted by it is far too large to make it really useful for our purposes. It turns out that to be considered "solid," a bounded, closed point set must satisfy a collection of additional requirements. The next sections will elaborate these.

---

it is the real world (the manufacturing engineer) who must imitate the idealized world, and not vice versa.

3.4.1 Rigidity

It is natural to expect that a solid object should remain the same if it is moved from one location to another. This can be expressed more rigorously by requesting that solids must remain invariant under *rigid transformations*, i.e., translations and rotations. The following definition captures the essence of this characterization:

Definition 3.2 *A* rigid object *is an equivalence class of point sets of* E^3 *spanned by the following equivalence relation* $\circ$*: Let* A*,* B *be subsets of* E^3*. Then* $A \circ B$ *holds iff* A *can be mapped to* B *with a rigid transformation.*

We might now add rigidity as one additional requirement to Definition 3.1. However, the usefulness of rigidity as defined above is somewhat diminished by the fact that most solid representations do not allow an efficient test for whether the relation $\circ$ is true for two models.

3.4.2 Regularity

Whether rigid or not, many closed and bounded point sets do not satisfy our notion of solidity. For instance, a set consisting of distinct points or lines is not solid.

We expect that a solid is "all material"; it is not possible that a single point, or a line, or even a two-dimensional area would be missing from a solid. Likewise, a "solid" point set must not contain "isolated points," "isolated lines," or "isolated faces" that do not have any material around them.

Again, these informal requirements can be compactly captured in the point-set topology language:

Definition 3.3 *The* regularization *of a point set* A*,* $r(A)$*, is defined by*

$$r(A) = c(i(A))$$

where $c(A)$ *and* $i(A)$ *denote the closure and interior of* A*. Sets that satisfy* $r(A) \equiv A$ *are said to be* regular.

Informally speaking, the regularization tears off all "isolated" parts of a point set, covers it completely with a tight "skin," and fills the result up with material (see Figure 3.2).

Regularity is so widely used as a characterization of reasonable solids that the following definition (by Requicha [95]) is appropriate:

Definition 3.4 *A bounded regular set is termed an* r-set.

Observe that regular sets need not be connected; for instance, the rigid combination of two regular sets is itself a regular set.

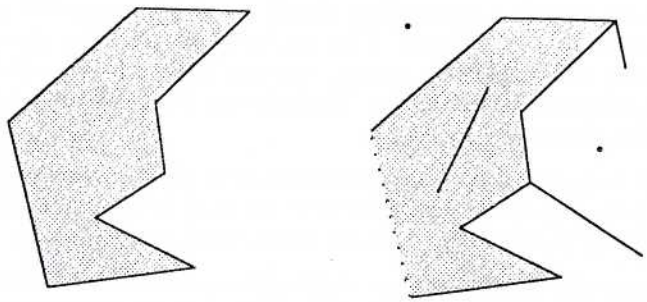

Figure 3.2 A regular and a nonregular set.

3.4.3 Representational Finiteness

We have no direct means for representing continuous point sets in a computer. To model objects with dimensionality (such as a straight line), we must always employ indirect methods (such as representing the line in terms of its endpoints). Even if it is physically naive, we must therefore assume that solids have some indirect finite representation.

Usually we must require that the surface of a solid is "smooth"[2] and can adequately be modeled in terms of reasonably simple mathematical functions. There are certain subtleties involved in the "reasonably simple" of above. For instance, the set of Figure 3.3 [94] is defined by the expression

$$x, y, z : \ x_0 \leq x \leq x_1, \ y = \sin(1/x) + h, \ z_0 \leq z \leq z_1$$

that includes only (seemingly) simple functions. Yet the set does not satisfy the ordinary notion of a solid if 0 is contained in the range $[x_0 x_1]$.

To get rid of such anomalous situations, we should restrict ourselves to objects whose surfaces are algebraic (or analytic at least). That is, the surfaces must be representable by means of (finite) polynomials of x, y, and z.

[2]The so-called *fractal surfaces* [72,41] form a remarkable exception in this respect: they are nowhere smooth but still have an indirect, recursive representation.

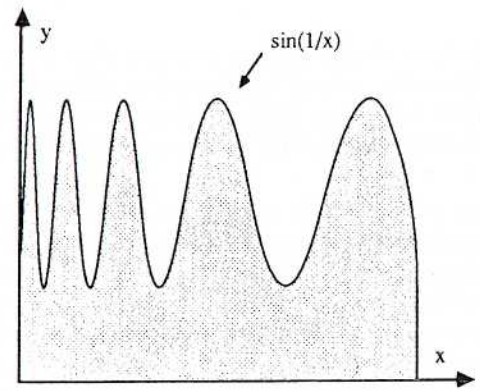

Figure 3.3 A nonphysical solid.

3.5 SURFACE-BASED MODELS

As seen in the previous section, we had to refer to properties of the bounding surfaces of a solid to avoid certain anomalies not captured by the point-set view. Indeed, it is perfectly possible to characterize modeling spaces just based on properties of surfaces.

The surface-based characterization of solids looks at the boundary of a solid object. The boundary is considered to consist of a collection of "faces" which are "glued" together so that they form a complete, closing "skin" around the object. In order to be able to rigorously speak about this informal procedure, and state explicitly under which conditions we get an object satisfying our notion of "solidity," we shall use concepts developed for another branch of topology, the so-called *algebraic topology* [52,81]. Again, the following development is somewhat technical, and some concepts introduced here will be used only in Part Two of this text.

3.5.1 2-Manifolds

Intuitively, a surface may be regarded as a subset of E^3 which is essentially "two-dimensional": every point of the surface (except points on the edge of an "open" surface patch) is surrounded by a "two-dimensional" region of points belonging to the surface.

The inherent two-dimensionality of a surface means that we can study its properties through a two-dimensional model. First, we shall define a

more abstract (and precise) notion of a "surface," and then construct a simple two-dimensional model for it in terms of a special topology defined on the two-dimensional Euclidean space E^2.

The more abstract counterpart of a "closed surface" is defined as follows:

Definition 3.5 *A 2-manifold M is a topological space where every point has a neighborhood topologically equivalent to an open disk of E^2.*

Intuitively, a bug living on M sees a continuous simple region of the surface all around itself. This intuitive view applies perfectly to ourselves and the planet Earth; indeed, the surface of a sphere is a 2-manifold.

3.5.2 Limitations of Manifold Models

Let us now fix our attention to an r-set A. If a 2-manifold M and the boundary of A, $b(A)$, are topologically equivalent, we say that A is a *realization* of M in E^3. As we shall see, the class of 2-manifolds that have at least one realization can be characterized precisely; we shall call such 2-manifolds *realizable*.

Unfortunately, not all r-sets are realizations of some 2-manifold. Figure 3.4 depicts some such sets. The problem with all these objects is that the surface "touches" itself in a point or at a curve segment. The neighborhoods of such points are not simple disks, as required by Definition 3.5. For instance, the neighborhood of the problem point in Figure 3.4(a) consists of two disks.

Hence, there is an inherent theoretical mismatch between r-set models and manifold models. For practical purposes, objects such as those of Figure 3.4 can be represented indirectly as 2-manifolds by "ignoring" the exceptional points and line segments; hence the object of Figure 3.4(a) would be represented as the rigid combination of two components that just happen to touch each other at a point.

3.5.3 Plane Models of 2-Manifolds

To establish sufficient conditions for the realizability of a 2-manifold, we need a mechanism that can represent all 2-manifolds in a way that allows us to reason about their properties. For this purpose, we use the *plane models*.

To illustrate the basic idea of the representation, let us consider first a simple example. Figure 3.5(a) represents a four-sided polygon, while (b) represents the surface (cylinder) obtained by gluing the two edges labeled with α in (a) together.

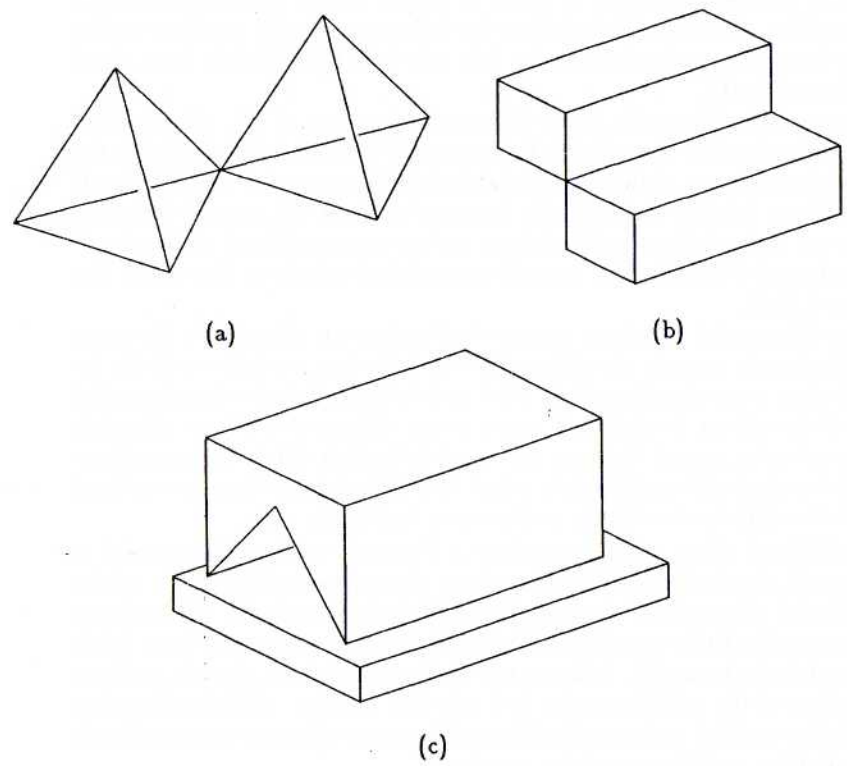

Figure 3.4 Solids with nonmanifold surfaces.

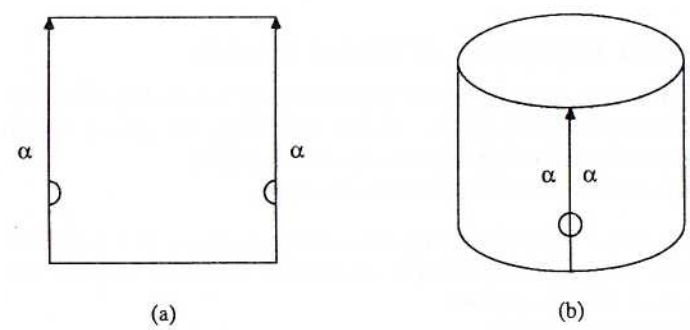

Figure 3.5 A cylinder surface.

The basic idea of what follows is to employ a (labeled) plane figure (such as the rectangle (a)) in order to reason about the properties of a surface (the cylinder). This is done by defining a *special topology* on the plane figure that pretends that the labeled edges have already been glued together as in (b).

As noted in Appendix B, in the *natural topology* of E^2, all neighborhoods of points are open disks of some radius r around the point. In the special topology we shall use, all neighborhoods except the neighborhoods of points on labeled edges are the same as those of the natural topology. However, the neighborhoods of those points are considered to consist of the union of two half-disks around symmetrical points on the edges (see Figure 3.5(a)).

By this special topology, symmetrical points on edges have the *same* neighborhoods, namely the disk neighborhoods they would have if the labeled edges were glued together. Such points are said to be (*topologically*) *identified*, and are treated as a single point. Observe that now all points of the cylinder, except those on the unlabeled edges of (a), have neighborhoods topologically equivalent to a disk of E^2. Because of these exceptional points the cylinder is called a *surface with boundary*.

Additional plane models are given in Figure 3.6. The plane model of a sphere is obtained simply by identifying the corresponding points on the two labeled edges of (a); the (American) football is an almost perfect practical example of this procedure. The natural continuation of Figure 3.5 is the model of a torus (b). It is created by identifying also the top and bottom edges of the cylinder model in a pairwise manner. (Think of bending a cylinder until its ends meet.) Observe that now all point neighborhoods are full disks, and these surfaces are *closed*.

Case (c) gives another variation of Figure 3.5: here the orientation of the identified edges have been reversed to yield the model of the well-known *Möbius strip*[3].

3.5.4 Formal Definition of Plane Models

In order to deal with more complicated plane models, we need to formalize the intuitive definition given above. In the following, we give a formal definition of plane models following the exposition of [52].

We start by defining the *identification* of edges:

Definition 3.6 *Let P be a set of polygons, and let $a_1, a_2, \ldots$ be a collection of edges of these polygons. These edges are termed* identified *when a new topology is defined on P as follows:*

[3]The use of plane models was invented by Möbius.

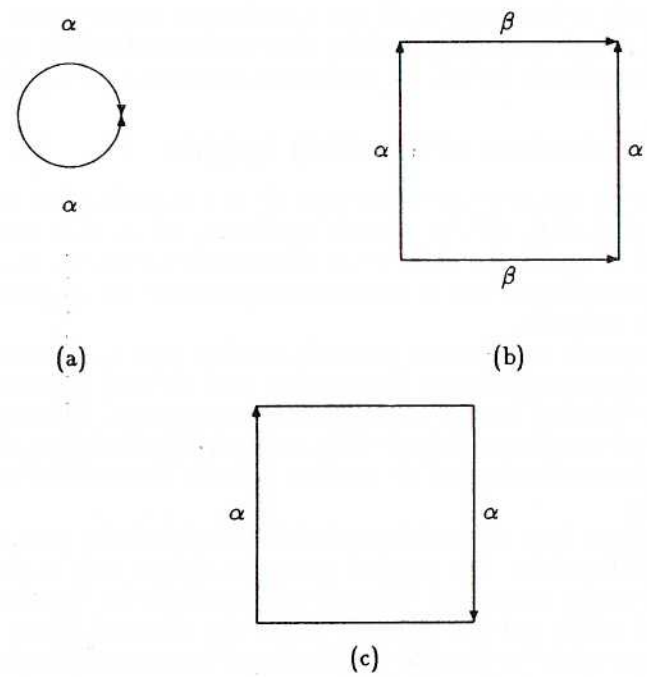

Figure 3.6 Other surfaces: sphere (a), torus (b), and Möbius strip (c).

1. *Each edge is assigned an orientation from one endpoint to the other, and placed in topological correspondence with the unit interval in such a way that the initial points of all edges correspond to 0 and final points correspond to 1.*
2. *The points on the edges $a_1, a_2, \ldots$ that all correspond to the same value from the unit interval are treated as a single point.*
3. *The neighborhoods of the new topology on P are the disks entirely contained in a single polygon plus the unions of half-disks whose diameters are matching intervals around corresponding points on the edges $a_1, a_2, \ldots$.*

In other words, in the new topology the identified edges $a_1, a_2, \ldots$ are treated as a single edge.

In the preceding examples, identification of edges was represented by labeling identified edges with the same label; arrows were used to indicate the orientation of the edges.

Next we need to define the identification of vertices:

Definition 3.7 *Let P be a set of polygons, and let $p_1, p_2, \ldots$ be a collection of vertices from these polygons. These vertices are said to be* identified *when a new topology is defined on P in which this collection of vertices is treated as a single point and the neighborhoods are defined to be disks completely contained in a single polygon plus the unions of portions of disks around each of the points $p_1, p_2, \ldots$. In case any of the edges meeting at one of these vertices is also identified, the sectors forming a neighborhood at $p_1, p_2, \ldots$ must contain matching intervals from these edges.*

If a collection of vertices $p_1, p_2, \ldots$ are identified, we shall say the respective polygons $r_1, r_2, \ldots$ are identified at that collection.

The plane models can now be defined more rigorously:

Definition 3.8 *A* plane model *is a planar directed graph $\{N, A, R\}$ with a finite number of* vertices $N = \{n_1, n_2, \ldots\}$, edges $A = \{a_1, a_2, \ldots\}$, *and* polygons $R = \{r_1, r_2, \ldots\}$ *bounded by edges and vertices. Each polygon of the graph has a certain orientation around its edges and vertices. Polygons, edges, and vertices of the graph are labeled; if a collection of edges or vertices has the same label, they are considered to be identified according to definitions 3.6 and 3.7 above.*

Figure 3.7(a) illustrates the definition above. In the figure, edges and vertices with corresponding labels are identified. Hence, for instance, the neighborhoods of each point on the edge with the label e_1 consist of two half-disks, and the neighborhood of the vertex v_1 consists of four disk sectors.

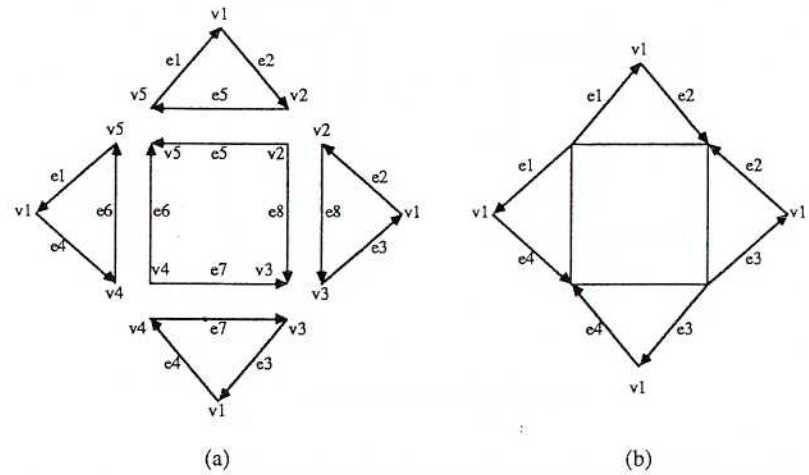

Figure 3.7 Plane models of a pyramid.

For simplicity, we shall often draw plane models in a condensed form such as in (b), where some identified edges are drawn just once, and their labels are not included. Similarly, we can draw a collection of identified vertices as a single point. Note that Figure 3.7(a) and (b) both represent the same structure $\{N, A, R\}$, and hence the same plane model. We shall also include the infinite "surrounding" polygon in a drawing of a plane model, when convenient (see, for instance, Figure 3.9 on page 44).

3.5.5 Realizable Plane Models

We can finally turn our attention to the necessary conditions for the realizability of a plane model.

Surface Subdivisions

Topological identification as defined above can produce neighborhoods that are not disks and do not, hence, satisfy the definition of a 2-manifold. To exclude these cases, we restrict the topological identification of plane models:

Definition 3.9 *A plane model is a* (surface) subdivision *if the following conditions are obeyed in the topological identification of its edges and vertices:*

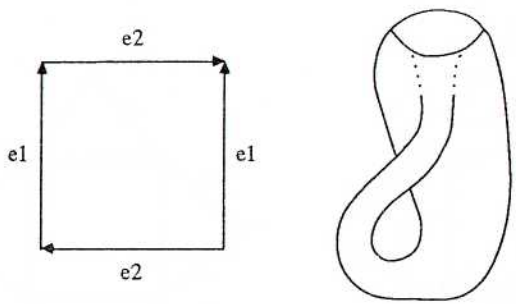

(a) (b)

Figure 3.8 Klein bottle.

1. *Every edge is identified with exactly one other edge.*
2. *For each collection of identified vertices, the polygons identified at that collection can be arranged in a cycle such that each consecutive pair of polygons in the cycle is identified at an edge adjacent to a vertex from the collection.*

Observe that the edge $v2$–$v5$ in Figure 3.7(b) actually represents the pair of edges labeled $e5$ in (a); hence, $v2$–$v5$ satisfies the first condition. The condition disallows objects such as that depicted in Figure 3.4(b); in this case, four edges are identified.

The second condition guarantees that the combined neighborhood of each identified group of vertices is a disk; for instance, the six polygons identified in Figure 3.4(a) cannot be arranged in a single cycle.

Orientability

There are 2-manifolds that do not have physical counterparts in E^3, i.e., that cannot be constructed in three-dimensional space at all, and are hence not the boundary of any r-set. For instance, the *Klein bottle* represented by the plane model of Figure 3.8 is such a surface. These nonrealizable 2-manifolds can be distinguished from realizable ones by the concept of *orientability*:

Definition 3.10 *A plane model is* orientable *if the directions of its polygons can be chosen so that for each pair of identified edges, one edge occurs in its positive orientation in the direction chosen for its polygon, and the other one in its negative orientation.*

This condition is known as the *Möbius' rule*.

In the following, we shall be interested in orientable plane models only as they correspond with surfaces that can be realized in E^3, i.e., can form the boundary of an r-set. As seen from the definition above, that all polygons are *consistently oriented* (i.e., all polygons are oriented, say, clockwise except the surrounding polygon which is oriented counterclockwise) is sufficient to guarantee the realizability of a plane model.

Intuitively, realizable plane models can be drawn on an r-set without crossing edges. A more rigorous way to express this is to note that points and open sets of the plane model can be mapped on points and open sets of the r-sets with a continuous transformation. In practice, we prefer mappings that can be represented by assigning geometric information (such as coordinate values, curve equations, and surface equations) to vertices, edges, and polygons of the plane model.

3.5.6 The Euler Characteristic

Consider the cube depicted in Figure 3.9(a). The cube has a total of $f = 6$ faces, $e = 12$ edges, and $v = 8$ vertices (where identified edges and vertices count as one). Observe that the plane model includes the surrounding exterior polygon, and that all edges are identified.

Clearly, the same surface could be modeled in terms of the modified model (b), obtained by replacing one square face of (a) by two triangles. The new model has one additional face and edge, or a new total of $f' = 7$ faces and $e' = 13$ edges.

Both plane models represent the same surface—namely, a surface topologically equivalent to the sphere. A property of fundamental importance is that the plane models are directly able to tell us this, as shown by the following theorem:

Theorem 3.11 *Let the surface S be given as a plane model and let v, e, and f denote the numbers of vertices, edges, and faces in the plane model. Then the sum $v - e + f$ is a constant independent of the manner in which S is divided up to form the plane model. This constant is called the* Euler characteristic *of the surface and is denoted $\chi(S)$.*

For our purposes, this *invariance theorem* is one of the central results of algebraic topology. Its formal proof would bring us too far from the scope of this book; see e.g. [52]. To get some reliance on it, it is easy to verify for the original cube that

$$\chi = v - e + f = 8 - 12 + 6 = 2.$$

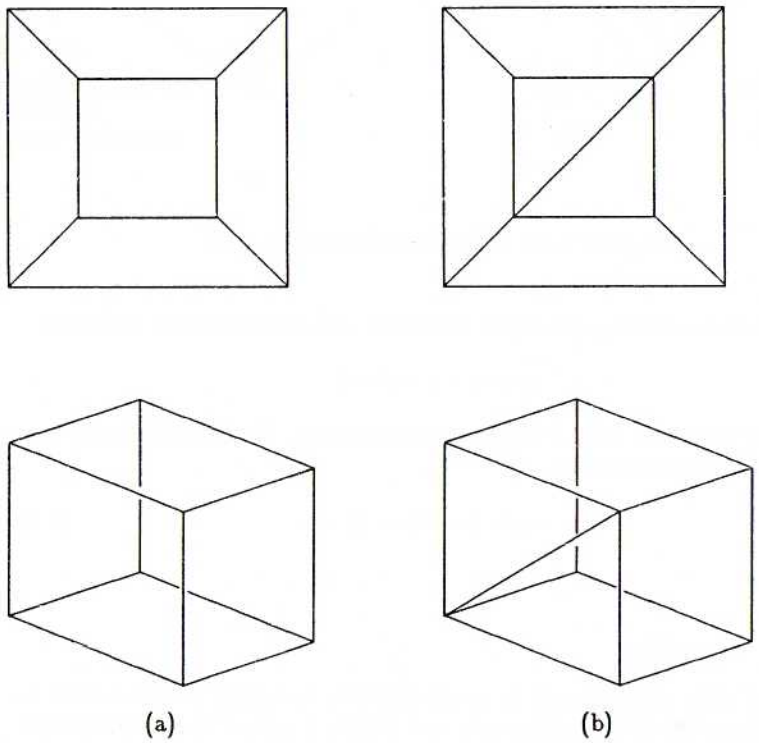

Figure 3.9 Models of a cube.

After the modification we have

$$\chi' = v - e' + f' = 8 - 13 + 7 = 2,$$

as expected. No matter how we alter the plane model to yield a new plane model, the Euler characteristic remains the same.

Betti Numbers

The theory of *homology* tells us that the Euler characteristic can be expressed as

$$\chi = h_0 - h_1 + h_2 \tag{3.1}$$

where h_0, h_1, and h_2 are called the *Betti numbers* of the plane model. Formula 3.1 is called the *Euler-Poincaré formula.*

The Betti numbers can be calculated through group-theoretic techniques from the plane model; however, this is beyond the scope of our interest. Instead, let us take a look at the topological significance of the Betti numbers. The second Betti number h_2 reveals the orientability of the surface, and equals h_0 for the kinds of surfaces we are interested in.

An arbitrary surface is always the union of a number of connected pieces called *components.* The zeroth Betti number equals the number of components. Hence, for the cube $h_0 = 1$, while for a set of six tennis balls $h_0 = 6$.

The first Betti number h_1 is called the *connectivity number* of the surface. It tells the largest number of closed curves that can be drawn on the surface without dividing it into two or more separate pieces. For the cube (or any surface topologically equivalent to it) $h_1 = 0$, because every closed curve would cut a part of the surface away. More intuitively, h_1 equals twice the number of "holes" in the object. A doughnut has one hole, and its $h_1 = 2$. Hence the Euler characteristic of a doughnut (or a coffee cup) is

$$\chi = 1 - 2 + 1 = 0.$$

The invariance theorem can be generalized for the Betti numbers as well. That is, no matter how a surface is divided up to make a plane model, the Betti numbers (and all topological characteristics conveyed by them) will remain invariant. This fact will be of interest to us in Chapter 9; for reference, let us state it as a theorem:

Theorem 3.12 *Let the surface S be given as a plane model. Then the Betti numbers h_0, h_1, and h_2 of the plane model are constants independent of the manner in which S is divided up to form the plane model.*

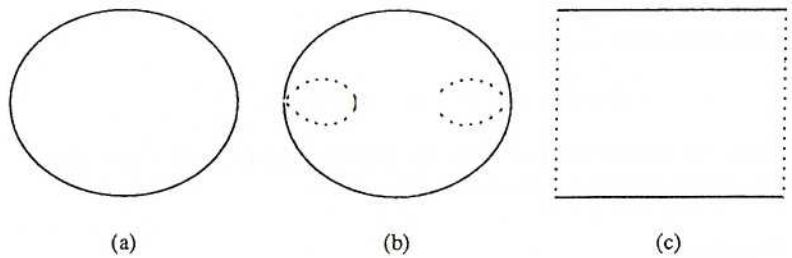

Figure 3.10 The making of a cylinder.

In the following, we shall use a more mnemonic notation for the Euler-Poincaré formula 3.1. We shall write s, the number of connected surfaces or "shells", to denote h_0. Similarly, h, the *genus* of the surface (or the sum of the genera of all components of a multicomponent model), is used to denote the number of holes and is defined $h_1/2$. With this notation, the Euler-Poincaré formula may be written in more familiar terms as

$$v - e + f = 2(s - h). \tag{3.2}$$

3.5.7 Surfaces With Boundary

As seen in previous sections, orientable 2-manifolds coincide with the informal concept of "closed physical surfaces." Sometimes, however, we would like to handle also surfaces that do not necessarily bound a solid.

One such case, the cylinder surface, was already depicted in Figure 3.5. Its plane model was characterized by some edges that were not identified to some other edge. These edges form the boundaries of the surface; hence the term *surfaces with boundary*.

Surfaces with boundary can be thought of as created from their closed counterparts by cutting some polygons away. For instance, a cylinder is created by removing two disks from a sphere, as depicted in Figure 3.10. In the figure, we start from a plane model of a sphere (a). The plane model is modified by removing two polygons (b) which leads to the plane model of the cylinder (c).

Using this mental tool, the theory of closed surfaces can be carried over to surfaces with boundary easily. For instance, to calculate the Euler characteristic of a surface with b boundary components, we proceed by adding b new polygons to its plane model that "mend" it to form the corresponding

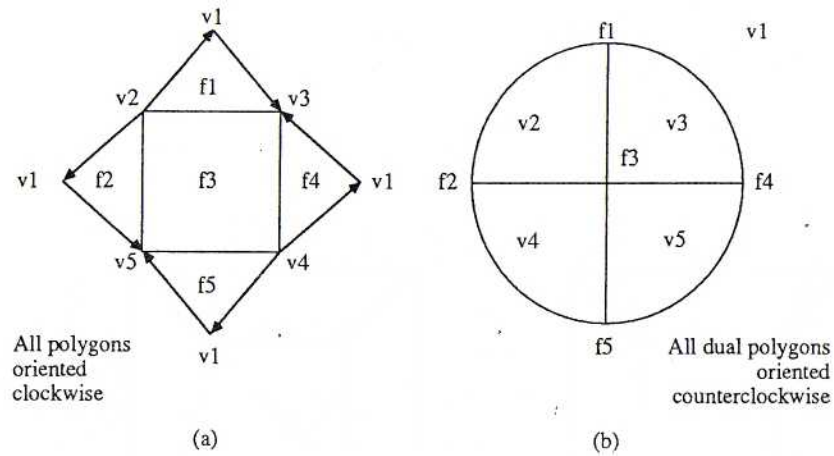

Figure 3.11 A plane model and its dual.

closed surface. Clearly, the Euler characteristic of the mended surface is

$$\chi = v - e + f + b.$$

Hence for a surface with b boundary components, the Euler-Poincaré formula 3.2 can be written as

$$v - e + f = 2(s - h) - b. \tag{3.3}$$

3.5.8 Duality

The *dual* of a planar graph is constructed by assigning a dual vertex to each polygon of the original graph, and joining a pair of dual vertices with a dual edge, if the corresponding original polygons share an edge (possibly through identification). In this fashion, dual polygons correspond with original vertices.

Using this procedure, we can convert a plane model of a surface to its dual plane model. An example of a plane model and its dual is given in Figure 3.11. Observe that the dual model (b) includes the infinite "surrounding" polygon v_1.

Note that polygons and edges of the dual plane model are oriented. To explain how the orientation of the dual plane model is chosen, let us

assume that the original model is consistently oriented. First, we use the convention that each dual edge is oriented towards the dual vertex that corresponds with the original polygon in which the edge occurs in its positive orientation. This determines uniquely the orientation of every dual edge. Directions of dual polygons are chosen by the following rule:

> *Let v, e, v^*, e^* denote an original vertex, an original edge adjacent to v, the dual polygon corresponding with v, and the dual of e. If v is the final point of e, the orientation of v^* is chosen so that e^* is traversed in its positive orientation, otherwise the opposite orientation is chosen.*

Under this rule, the orientation of dual polygons will be consistent. Furthermore, the dual of a dual plane model will be identical with the original model. We actually define the cyclical ordering of the edges around a vertex to be equal to the ordering of the corresponding dual edges in the dual polygon of the vertex. The dual is a surface subdivision because all its edges are identified with exactly one other edge.

We are interested on duality primarily because of the following:

Lemma 3.13 *All topological properties of a plane model are preserved in its dual.*

In particular, the Betti numbers and the Euler characteristic χ of a plane model and its dual are equal.

Duals of plane models will be of use when arguing about the manipulation of plane models in Section 9.1.1.

3.5.9 Wrap-Up of Plane Models

We may now conclude the somewhat lengthy development as follows:

> The surface of a solid can be rigorously modeled in terms of a planar graph with a special topology. Based on the graph, we can decude the overall topological properties of the surface, such as its orientability, connectivity, and the number of "holes" through it. Such properties are compactly expressed in the form of the Euler-Poincaré formula.

Of course, for the purposes of solid modeling, we shall be primarily interested in realizable plane models—that is, plane models that can be drawn on the boundary of an r-set. As we shall see later, the theory of plane models will allow the derivation of manipulation operations of plane models that always will yield realizable plane models while being general enough to model all plane models of interest.

3.6 REPRESENTATION SCHEMES

Having now tackled the proper definition of a mathematical modeling space for solid modeling, we can now consider the problems of assigning computerized representations of the objects of the modeling space. As mentioned in Section 3.2, the three-level view of modeling allows us to precisely define the relationship of objects and their representations.

Let M denote a mathematical modeling space of objects. In this section, let "solid" denote an entity of M.

Definition 3.14 *A* solid representation *is a finite collection of symbols (of a finite alphabet) that designates a solid of M.*

Definition 3.15 *The representation techniques of a given solid modeler define the* representation space *R of the modeler. Those representations that actually can be constructed by the solid modeler according to its syntax rules are termed* admissible. *In this section, we shall call entities of R "representations."*

Observe that any solid representation $r \in R$ is meaningful only when related to an entity $m \in M$. Hence the significance of solid representations is expressed by a mapping from R to M:

Definition 3.16 *A* representation scheme *is a relation $s : M \rightarrow R$. The domain of s (i.e., those $s \in M$ that have an image under s) is denoted by D and the image of D under s by V. The inverse relation of s is denoted by s^{-1}. That $r \in R$ is the image of $m \in M$ under s will be denoted by $\{m, r\} \in s$.*

The validity of a representation can now be expressed more rigorously:

Definition 3.17 *Any representation $r \in V$ is termed* valid.

Note that each valid representation is hence the image of at least one entity of M. However, we neither assume that all solids of M are representable (i.e., D need not equal M) nor that all representations of R are valid (i.e., V need not equal R). See Figure 3.12 for an illustration of this.

With the concepts developed so far, we can characterize ambiguity as a property of a representation scheme:

Definition 3.18 *If any valid representation models exactly one solid under s (i.e., it is the image of exactly one solid of M), s is called* unambiguous *or* informationally complete. *In other words, this property requires that for each valid representation $r \in V$, it holds that*

$$\{m, r\} \in s \wedge \{m', r\} \in s \Rightarrow m = m'.$$

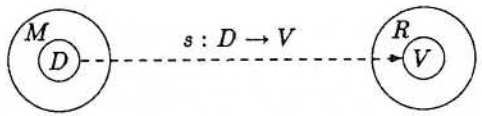

Figure 3.12 Definition of a representation scheme.

Unambiguity assures that a representation always designates a unique solid. Hence unambiguous representations in principle contain complete information of the solid. Note that a solid may still have many representations under an unambiguous representation scheme. A symmetric variation of unambiguity requires that this may not happen:

Definition 3.19 *A representation scheme s is termed* unique *if all solids $m \in D$ have exactly one representation, i.e., if*

$$\{m, r\} \in s \wedge \{m, r'\} \in s \Rightarrow r = r'.$$

If interpreted literally, uniqueness requires that a solid has just a single representation independent of its orientation. As this is unfortunately rarely the case, we shall also use a weaker form of uniqueness as defined below:

Definition 3.20 *A representation scheme s is* weakly unique *if every oriented instance of every solid $m \in D$ has only one representation.*

In the following, the term "uniqueness" will refer to weak uniqueness, unless explicitly mentioned otherwise.

3.6.1 Properties of Representation Schemes

Alternative major approaches to solid modeling differ in the modeling spaces, representation spaces, and representation schemes they can support. In addition, the definition of representation schemes allows us to

discuss their desired properties on a fairly general level. Some properties were already described in the preceding section. For clarity, the following list rephrases those properties as well.

1. *Expressive power:* What objects are included in the domain D covered by the representation scheme? Is it possible to extend the domain? One aspect of the expressive power is the *precision* of the representation scheme: how accurately can complicated objects be modeled?

2. *Validity:* Are all admissible representations valid, i.e., do they designate some solids of M? A scheme with this desirable property is termed *syntactically valid* as it enforces validity of all solid descriptions that obey its syntax rules.

3. *Unambiguity and uniqueness:* Do all valid representations model exactly one solid? Do some solids have more than one valid representation?

4. *Description languages:* What kinds of solid description languages can be supported in a modeling system based on the representation scheme? Are they *self-contained*, i.e., directly based on the representations of the scheme, or are they based on a *conversion* from other representations?

5. *Conciseness:* How large (in terms of computer storage) do representations of practically interesting solids become? (This property is often in contradiction with the precision of the representation.)

6. *Closure of operations:* Do solid description and manipulation operations preserve the validity of solid representations? How general are the manipulations that can be supported?

7. *Computational ease and applicability:* What kinds of algorithms can be written for the representations of the scheme for, say, computations of Table 1.1? What kinds of computational complexities are involved? What kinds of applications are the representations of the scheme suited for? Of course, we are particularly interested on "self-contained" solutions that do not involve a conversion into some entirely different representation.

Some of these properties have a formal meaning in terms of the theory of representation schemes, while others have a practical flavor which is important in implementing a particular modeling system.

3.7 PRIMITIVE INSTANCING

Let us now clarify the theory of the preceding section by looking at a sample scheme for representing solid objects. This scheme will be of interest also in later chapters.

3.7.1 Concepts of Primitive Instancing

The simplest way of describing geometric objects is the *Primitive Instancing* scheme. In this approach, we restrict ourselves to modeling objects belonging to one of predefined primitive object types. For instance, we might model mechanical components by generating a sufficiently large collection of "library" parts. Models are simply instances of them, created with an instantiation operation. The instantiation requires a few descriptive parameters (such as, say, component type and size) that together form the model. Algorithms for this scheme operate by examining a tuple of descriptive parameters, and performing operations tailored for each component type.

Consider, for instance, an instancing scheme consisting of the single primitive type "t-brick." Its descriptive parameters would consist of an object type code, and five numerical values l, h_1, h_2, w_1, and w_2 indicating the dimensions of the object as depicted in Figure 3.13. Additionally, the orientation of the brick would be specified, say, in terms of a rigid transformation.

The domain D of this instancing scheme is the set of all bricks, and the representation space R consists of all 6-tuples (records) of the form

$$(tbrick, l, h_1, h_2, w_1, w_2).$$

To be a valid representation, i.e., to designate a physically meaningful object, the parameters should satisfy the following inequalities:

$$\begin{aligned} 0 &< l \\ 0 &< h_1 \\ 0 < h_2 &\leq h_1 \\ 0 &< w_1 \\ 0 < w_2 &\leq w_1. \end{aligned} \tag{3.4}$$

Obviously, primitive instancing schemes are unambiguous: a valid tuple fully determines a brick. Their uniqueness is somewhat more problematic, however. Too see why, let us introduce another primitive into our sample instancing scheme, the primitive type "block," described with a type code and numerical values l, h, and w (Figure 3.14). Observe that two different

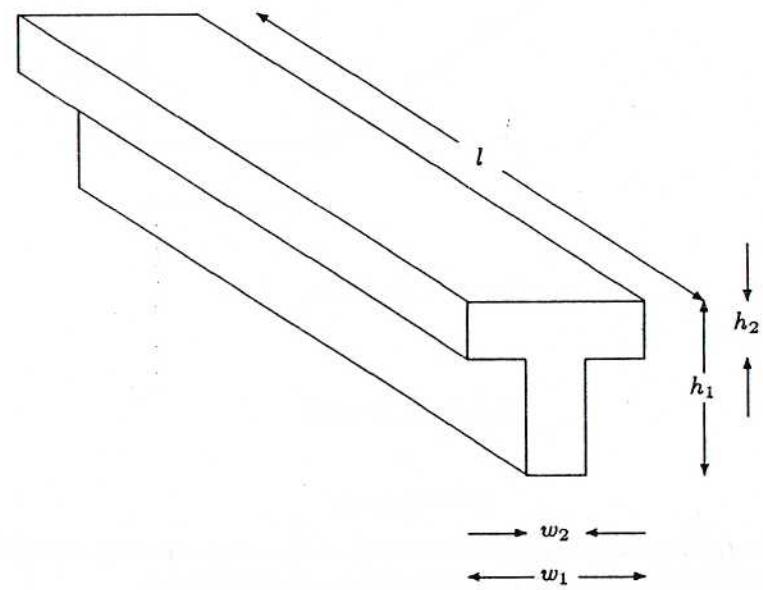

Figure 3.13 T-brick.

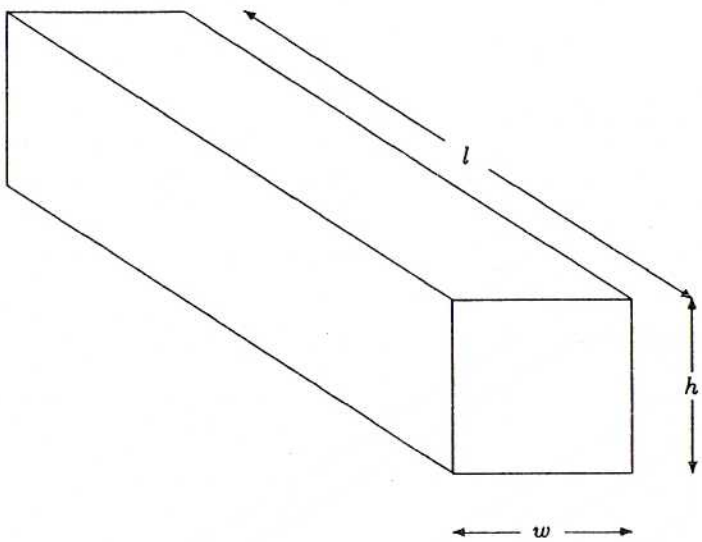

Figure 3.14 Block.

tuples

$$(tbrick, l, h, h, w, w)$$

and

$$(block, l, h, w)$$

describe the same object (Equations 3.4 allow $w_1 = w_2$). We may conclude that primitive instancing schemes are not necessarily unique.

3.7.2 Properties of Primitive Instancing

Let us discuss the properties of the primitive instancing scheme according to the framework given in Section 3.6.1.

Expressive power: Clearly, the modeling space of a primitive instancing scheme is determined completely by (1) the collection of primitive object types and (2) the nature of the instantiation operation. Obviously, it is painful to incorporate a large modeling space in this approach. A more involved problem is that it is not easy to find natural parameterizations for certain parts.

Validity: It is easy to build validity enforcement checks into the instancing operation. For instance, in the example above this amounts to checking whether the Equations 3.4 are satisfied.

Unambiguity and uniqueness: Instances always determine uniquely an object; hence they are unambiguous. As the example shows, they are not unique.

Description languages: The essential task describing an object in the primitive instancing scheme is the *selection* of the proper solid type from a fixed collection. The selection can be performed in many ways, including a menu driven, graphical operation. These procedures are obviously self-contained.

Conciseness: Properly structured primitive instancing schemes are concise.

Closure of operations: Primitive instancing does not support object modification operations in the general sense: the only possibility is the modification of instantiation parameters. As this operation can be subjected to similar checks as the original instantiation, the operations of the scheme are closed, i.e., yield valid models.

Computational ease and applicability: Algorithms for the primitive instancing scheme take the form of a (huge) case analysis, that finally breaks into tailored code for each object type. In the example, the volume of an object would be calculated by examining the type code and by performing a different routine for each object type. The resulting computational power can be good, because each case can be separately optimized.

As we shall see in the following chapters, primitive instancing is often used as an *auxiliary* scheme in modelers based on other representations in order to ease the description of often-needed parts. In this role it is indispensable, for instance, in problem areas such as design of electrical instrumentation or piping.

3.8 A TAXONOMY OF SOLID MODELS

As set forth in the preceeding sections, we may view solid objects as point sets of the Euclidean three-dimensional space satisfying restrictions that catch our idea of "solidity." To such sets, solid modeling aims to assign finite representations suitable for generating data for algorithms.

Primitive instancing can be viewed as a method of describing certain point sets indirectly through a tuple of their attributes. Unfortunately, as we saw in the previous section, either the modeling space of the modeler must be severely limited or a excessively large collection of primitives must be supported to make this approach generally applicable.

Therefore, we need a representation that encodes the infinite point set in a finite amount of computer storage in a more generic fashion. Representations achieving this may be divided in three large classes as follows:

1. *Decomposition models*, that represent a point set as a collection of simple objects from a fixed collection of primitive object types, combined with a single "gluing" operation. (Primitive instancing can be considered a special case of this approach.)

2. *Constructive models*, that represent a point set as a combination of primitive point sets. Each of the primitives is represented as an instance of a *primitive solid type*. Constructive models include more general construction operations than mere gluing. As we shall see, their theory is based on the point-set formulation of solidity presented in Section 3.4.

3. *Boundary models*, that represent a point set in terms of its boundary. The boundary of a three-dimensional "solid" point set is a two-dimensional surface that is usually represented as the collection of *faces*. Faces, again, are often represented in terms of their boundary being a one-dimensional curve. Hence boundary models may be viewed as a hierarchy of models. Boundary models are based on the surface-oriented formulation of solid objects presented in Section 3.5.

These major approaches to solid modeling will be described in the following three chapters. We shall also be interested on *multirepresentational* and *hybrid* modelers that employ several representations simultaneously. These models shall be dealt with in Chapter 7.

PROBLEMS

3.1. The footnote on page 32 points out that sometimes we are not modeling physical reality, but an idealized world. Can you think of other examples of this besides engineering design?

3.2. Discuss the physical meaningfulness of nonmanifold objects such as those of Figure 3.4 on page 37. Are some more "meaningful" than others? Can you think of criteria that would allow us to make a distinction between "meaningful" and "nonmeaningful" nonmanifold objects?

3.3. The nonuniqueness of primitive instancing schemes can be demonstrated without introducing the "block" primitive in addition to the "t-brick." Give two different "t-brick" 6-tuples that correspond with the same object.

BIBLIOGRAPHIC NOTES

Much of the material of this chapter is based on the works of Aristides A.G. Requicha and his colleagues with the PADL-project at the University of Rochester. The technical report series of the PADL-project is strongly suggested reading to all persons interested on the fundamentals of solid modeling.

The three-level modeling approach is originally presented in report [94] that also discusses in detail point-set and manifold models. The report goes into much more detail as for the group-theoretic techniques for dealing with plane models, although Requicha uses a different notation.

Report [97] can be considered a basic reference to point-set models and constructive models which are the subject matter of Chapter 5.

The article [95] draws some of the material of the technical reports cited above in a more streamlined form, and presents the theory of representation schemes. The list of desired properties of solid presentations of Section 3.6.1 is based on the list presented in this article.

Plane models for rigorous discussion on solid models were introduced in articles by Hanrahan [50] (briefly) and this author [75] (extensively). In their article [49], Guibas and Stolfi present another variation of plane models, and modeling primitives that can handle even nonorientable objects such as the Klein bottle.

Texts on topology and particularly in algebraic topology are usually rather heavy for a non-mathematician reader. The (in this chapter often-cited) book of Henle [52] is an exception of this rule. Other standard texts include [3,1,30]. A standard reference in graph theory is [51].